3 5/8" WALL SCHEDULES

TOP CONNECTION

INTERIOR TOP TRACK SCHEDULE -L/240-

WALL HEIGHT	(1) LAYER GYPSUM TOP TRACK THICKNESS	(2) LAYER GYPSUM TOP TRACK THICKNESS
0'-0" TO 14'-0"	33 MIL*	33 MIL*
14'-1" TO 16'-0"	33 MIL*	33 MIL*
16'-1" TO 18'-0"	54 MIL	54 MIL
18'-1" TO 20'-0"	54 MIL	54 MIL

* - USE 54 MIL SLOTTED TRACK AT OPENINGS LARGER THAN 8'-3". SLOTTED TRACK TO EXTEND MINIMUM 1'-0" BEYOND JAMB STUD.

HEADER-1 HR

INTERIOR HEADER SCHEDULE -L/240- WALLS W/ (1) LAYER GYPSUM

WALL HEIGHT	MAX. OPENING WIDTH 0'-0" TO 4'-3"	4'-4" TO 6'-3"	6'-4" TO 8'-3"	8'-4" TO 10'-3"	10'-4" TO 12'-0"
0'-0" TO 14'-0"	362S162-43 + 362T150-43	362S162-54 + 362T150-54	362S162-68 + 362T150-68	(2) 362S162-54 + 362T150-54	(2) 362S162-54 + 362T150-54
14'-1" TO 16'-0"	362S162-43 + 362T150-43	362S162-54 + 362T150-54	362S162-68 + 362T150-68	(2) 362S162-54 + 362T150-54	(2) 362S162-54 + 362T150-54
16'-1" TO 18'-0"	362S162-43 + 362T150-43	362S162-54 + 362T150-54	(2) 362S162-54 + 362T150-54	(2) 362S162-54 + 362T150-54	(2) 362S162-68 + 362T150-68
18'-1" TO 20'-0"	362S162-43 + 362T150-43	362S162-54 + 362T150-54	(2) 362S162-54 + 362T150-54	(2) 362S162-54 + 362T150-54	(2) 362S162-68 + 362T150-68

AT 1 HOUR WALL

HEADER-2 HR

INTERIOR HEADER SCHEDULE -L/240- WALLS W/ (2) LAYERS GYPSUM

WALL HEIGHT	MAX. OPENING WIDTH 0'-0" TO 4'-3"	4'-4" TO 6'-3"	6'-4" TO 8'-3"	8'-4" TO 10'-3"	10'-4" TO 12'-0"
0'-0" TO 14'-0"	362S162-43 + 362T150-43	362S162-54 + 362T150-54	(2) 362S162-54 + 362T150-54	(2) 362S162-54 + 362T150-54	(2) 362S162-68 + (2) 362T150-68
14'-1" TO 16'-0"	362S162-54 + 362T150-54	362S162-68 + 362T150-68	(2) 362S162-54 + 362T150-54	(2) 362S162-68 + 362T150-68	(2) 362S162-97 + (2) 362T150-97
16'-1" TO 18'-0"	362S162-54 + 362T150-54	362S162-68 + 362T150-68	(2) 362S162-54 + 362T150-54	(2) 362S162-68 + 362T150-68	N/A
18'-1" TO 20'-0"	362S162-54 + 362T150-54	(2) 362S162-54 + 362T150-54	(2) 362S162-68 + 362T150-68	(2) 362S162-97 + (2) 362T150-97	N/A

AT 2 HOUR WALL

JAMB-1 HR OR 2-HR

INTERIOR JAMB SCHEDULE -L/240- WALLS W/ (1) OR (2) LAYER(S) GYPSUM

WALL HEIGHT	MAX. OPENING WIDTH 0'-0" TO 4'-3"	4'-4" TO 6'-3"	6'-4" TO 8'-3"	8'-4" TO 10'-3"	10'-4" TO 12'-0"
0'-0" TO 14'-0"	362S162-43	362S162-54	(2) 362S162-43	(2) 362S162-43	(2) 362S162-43
14'-1" TO 16'-0"	362S162-54	(2) 362S162-43	(2) 362S162-43	(3) 362S162-43	(3) 362S162-43
16'-1" TO 18'-0"	(2) 362S162-43	(3) 362S162-43	(3) 362S162-54	(3) 362S162-54	(3) 362S162-54
18'-1" TO 20'-0"	(3) 362S162-43	(3) 362S162-43	(3) 362S162-54	(3) 362S162-68	(3) 362S162-97

AT 1 OR 2 HOUR WALL

SILL

INTERIOR SILL SCHEDULE -L/240- WALLS W/ (1) OR (2) LAYER(S) GYPSUM

WALL HEIGHT	MAX. OPENING WIDTH 0'-0" TO 4'-3"	4'-4" TO 6'-3"	6'-4" TO 8'-3"	8'-4" TO 10'-3"	10'-4" TO 12'-0"
0'-0" TO 14'-0"	362T150-33	362T150-33	362T150-33	362T150-43	362S162-43 + 362T150-43
14'-1" TO 16'-0"	362T150-33	362T150-33	362T150-33	362T150-54	362S162-43 + 362T150-43
16'-1" TO 18'-0"	362T150-33	362T150-33	362T150-43	362T150-54	362S162-43 + 362T150-43
18'-1" TO 20'-0"	362T150-33	362T150-33	362T150-43	362T150-54	362S162-43 + 362T150-43

AT 1 OR 2 HOUR WALL

STUD

INTERIOR TYPICAL STUD SCHEDULE -L/240-

WALL HEIGHT	STUD DESCRIPTION (1) OR (2) LAYER(S) GYP.	STUD DESCRIPTION (1) OR (2) LAYER(S) GYP.
0'-0" TO 14'-0"	362S125-33 @ 16" O/C	362S137-33 @ 24" O/C
14'-1" TO 16'-0"	362S137-33 @ 16" O/C	362S200-33 @ 24" O/C
16'-1" TO 18'-0"	362S137-43 @ 16" O/C	362S200-54 @ 24" O/C
18'-1" TO 20'-0"	362S162-54 @ 16" O/C	362S300-54 @ 24" O/C

AT 1 OR 2 HOUR WALL

4" WALL SCHEDULES

INTERIOR TOP TRACK SCHEDULE -L/240-

WALL HEIGHT	(1) LAYER GYPSUM TOP TRACK THICKNESS	(2) LAYER GYPSUM TOP TRACK THICKNESS
0'-0" TO 14'-0"	33 MIL*	33 MIL*
14'-1" TO 16'-0"	33 MIL*	33 MIL*
16'-1" TO 18'-0"	54 MIL	54 MIL
18'-1" TO 20'-0"	54 MIL	54 MIL

* - USE 54 MIL SLOTTED TRACK AT OPENINGS LARGER THAN 8'-3". SLOTTED TRACK TO EXTEND MINIMUM 1'-0" BEYOND JAMB STUD.

INTERIOR HEADER SCHEDULE -L/240- WALLS W/ (1) LAYER GYPSUM

WALL HEIGHT	MAX. OPENING WIDTH 0'-0" TO 4'-3"	4'-4" TO 6'-3"	6'-4" TO 8'-3"	8'-4" TO 10'-3"	10'-4" TO 12'-0"
0'-0" TO 14'-0"	400S162-43 + 400T150-43	400S162-43 + 400T150-43	400S162-54 + 400T150-54	(2) 400S162-43 + 400T150-43	(2) 400S162-54 + 400T150-54
14'-1" TO 16'-0"	400S162-43 + 400T150-43	400S162-54 + 400T150-54	400S162-68 + 400T150-68	(2) 400S162-54 + 400T150-54	(2) 400S162-54 + 400T150-54
16'-1" TO 18'-0"	400S162-43 + 400T150-43	400S162-54 + 400T150-54	(2) 400S162-43 + 400T150-43	(2) 400S162-54 + 400T150-54	(2) 400S162-68 + 400T150-68
18'-1" TO 20'-0"	400S162-43 + 400T150-43	400S162-54 + 400T150-54	(2) 400S162-54 + 400T150-54	(2) 400S162-54 + 400T150-54	(2) 400S162-68 + 400T150-68

AT 1 HOUR WALL

INTERIOR HEADER SCHEDULE -L/240- WALLS W/ (2) LAYERS GYPSUM

WALL HEIGHT	MAX. OPENING WIDTH 0'-0" TO 4'-3"	4'-4" TO 6'-3"	6'-4" TO 8'-3"	8'-4" TO 10'-3"	10'-4" TO 12'-0"
0'-0" TO 14'-0"	400S162-43 + 400T150-43	400S162-54 + 400T150-54	(2) 400S162-54 + 400T150-54	(2) 400S162-54 + 400T150-54	(2) 400S162-68 + 400T150-68
14'-1" TO 16'-0"	400S162-43 + 400T150-43	400S162-68 + 400T150-68	(2) 400S162-54 + 400T150-54	(2) 400S162-68 + 400T150-68	(2) 400S162-68 + (2) 400T150-68
16'-1" TO 18'-0"	400S162-54 + 400T150-54	400S162-68 + 400T150-68	(2) 400S162-54 + 400T150-54	(2) 400S162-68 + 400T150-68	(2) 400S162-97 + (2) 400T150-97
18'-1" TO 20'-0"	400S162-54 + 400T150-54	(2) 400S162-54 + 400T150-54	(2) 400S162-54 + 400T150-54	(2) 400S162-68 + (2) 400T150-68	N/A

AT 2 HOUR WALL

INTERIOR JAMB SCHEDULE -L/240- WALLS W/ (1) OR (2) LAYER(S) GYPSUM

WALL HEIGHT	MAX. OPENING WIDTH 0'-0" TO 4'-3"	4'-4" TO 6'-3"	6'-4" TO 8'-3"	8'-4" TO 10'-3"	10'-4" TO 12'-0"
0'-0" TO 14'-0"	400S162-33	400S162-43	400S162-54	400S162-54	(2) 400S162-43
14'-1" TO 16'-0"	400S162-43	400S162-54	(2) 400S162-43	(2) 400S162-43	(2) 400S162-43
16'-1" TO 18'-0"	(2) 400S162-43	(2) 400S162-43	(3) 400S162-43	(3) 400S162-43	(2) 400S162-43
18'-1" TO 20'-0"	(2) 400S162-43	(3) 400S162-43	(3) 400S162-54	(3) 400S162-54	(3) 400S162-68

AT 1 OR 2 HOUR WALL

INTERIOR SILL SCHEDULE -L/240- WALLS W/ (1) OR (2) LAYER(S) GYPSUM

WALL HEIGHT	MAX. OPENING WIDTH 0'-0" TO 4'-3"	4'-4" TO 6'-3"	6'-4" TO 8'-3"	8'-4" TO 10'-3"	10'-4" TO 12'-0"
0'-0" TO 14'-0"	400T150-33	400T150-33	400T150-33	400T150-43	400T150-54
14'-1" TO 16'-0"	400T150-33	400T150-33	400T150-33	400T150-43	400T150-54
16'-1" TO 18'-0"	400T150-33	400T150-33	400T150-33	400T150-54	400S162-43 + 400T150-43
18'-1" TO 20'-0"	400T150-33	400T150-33	400T150-43	400T150-54	400S162-43 + 400T150-43

AT 1 OR 2 HOUR WALL

INTERIOR TYPICAL STUD SCHEDULE -L/240-

WALL HEIGHT	STUD DESCRIPTION (1) OR (2) LAYER(S) GYP.	STUD DESCRIPTION (1) OR (2) LAYER(S) GYP.
0'-0" TO 14'-0"	400S125-33 @ 16" O/C	400S125-33 @ 24" O/C
14'-1" TO 16'-0"	400S125-33 @ 16" O/C	400S162-33 @ 24" O/C
16'-1" TO 18'-0"	400S137-33 @ 16" O/C	400S162-43 @ 24" O/C
18'-1" TO 20'-0"	400S162-43 @ 16" O/C	400S200-54 @ 24" O/C

AT 1 OR 2 HOUR WALL

6" WALL SCHEDULES

INTERIOR TOP TRACK SCHEDULE -L/240-

WALL HEIGHT	(1) LAYER GYPSUM TOP TRACK THICKNESS	(2) LAYER GYPSUM TOP TRACK THICKNESS
0'-0" TO 14'-0"	33 MIL*	33 MIL*
14'-1" TO 16'-0"	33 MIL*	33 MIL*
16'-1" TO 18'-0"	54 MIL	54 MIL
18'-1" TO 20'-0"	54 MIL	54 MIL

* - USE 54 MIL SLOTTED TRACK AT OPENINGS LARGER THAN 8'-3". SLOTTED TRACK TO EXTEND MINIMUM 1'-0" BEYOND JAMB STUD.

INTERIOR HEADER SCHEDULE -L/240- WALLS W/ (1) LAYER GYPSUM

WALL HEIGHT	MAX. OPENING WIDTH 0'-0" TO 4'-3"	4'-4" TO 6'-3"	6'-4" TO 8'-3"	8'-4" TO 10'-3"	10'-4" TO 12'-0"
0'-0" TO 14'-0"	600S162-43 + 600T150-43	600S162-43 + 600T150-43	600S162-54 + 600T150-54	600S162-68 + 600T150-68	(2) 600S162-54 + 600T150-54
14'-1" TO 16'-0"	600S162-43 + 600T150-43	600S162-43 + 600T150-43	600S162-54 + 600T150-54	(2) 600S162-43 + 600T150-43	(2) 600S162-54 + 600T150-54
16'-1" TO 18'-0"	600S162-43 + 600T150-43	600S162-54 + 600T150-54	600S162-68 + 600T150-68	(2) 600S162-54 + 600T150-54	(2) 600S162-54 + 600T150-54
18'-1" TO 20'-0"	600S162-43 + 600T150-43	600S162-54 + 600T150-54	600S162-68 + 600T150-68	(2) 600S162-54 + 600T150-54	(2) 600S162-68 + 600T150-68

AT 1 HOUR WALL

**AT 8" WALLS, USE THE SAME SIZE HEADER AS THE 6" WALL.

INTERIOR HEADER SCHEDULE -L/240- WALLS W/ (2) LAYERS GYPSUM

WALL HEIGHT	MAX. OPENING WIDTH 0'-0" TO 4'-3"	4'-4" TO 6'-3"	6'-4" TO 8'-3"	8'-4" TO 10'-3"	10'-4" TO 12'-0"
0'-0" TO 14'-0"	600S162-43 + 600T150-43	600S162-54 + 600T150-54	600S162-68 + 600T150-68	(2) 600S162-54 + 600T150-54	(2) 600S162-68 + 600T150-68
14'-1" TO 16'-0"	600S162-43 + 600T150-43	600S162-54 + 600T150-54	(2) 600S162-54 + 600T150-54	(2) 600S162-54 + 600T150-54	(2) 600S162-68 + 600T150-68
16'-1" TO 18'-0"	600S162-43 + 600T150-43	600S162-68 + 600T150-68	(2) 600S162-54 + 600T150-54	(2) 600S162-68 + 600T150-68	(2) 600S162-54 + (2) 600T150-54
18'-1" TO 20'-0"	600S162-54 + 600T150-54	600S162-68 + 600T150-68	(2) 600S162-54 + 600T150-54	(2) 600S162-68 + 600T150-68	(2) 600S162-54 + (2) 600T150-54

AT 2 HOUR WALL

**AT 8" WALLS, USE THE SAME SIZE HEADER AS THE 6" WALL.

INTERIOR JAMB SCHEDULE -L/240- WALLS W/ (1) OR (2) LAYER(S) GYPSUM

WALL HEIGHT	MAX. OPENING WIDTH 0'-0" TO 4'-3"	4'-4" TO 6'-3"	6'-4" TO 8'-3"	8'-4" TO 10'-3"	10'-4" TO 12'-0"
0'-0" TO 14'-0"	600S162-33	600S162-33	600S162-33	600S162-43	600S162-43
14'-1" TO 16'-0"	600S162-33	600S162-33	600S162-43	600S162-43	600S162-54
16'-1" TO 18'-0"	600S162-33	600S162-43	600S162-54	600S162-54	600S162-54
18'-1" TO 20'-0"	600S162-43	600S162-54	600S162-54	(2) 600S162-43	(2) 600S162-43

AT 1 OR 2 HOUR WALL

**AT 8" WALLS, USE THE SAME SIZE JAMB AS THE 6" WALL EXCEPT USE 43 MIL AT 33 MIL JAMBS

INTERIOR SILL SCHEDULE -L/240- WALLS W/ (1) OR (2) LAYER(S) GYPSUM

WALL HEIGHT	MAX. OPENING WIDTH 0'-0" TO 4'-3"	4'-4" TO 6'-3"	6'-4" TO 8'-3"	8'-4" TO 10'-3"	10'-4" TO 12'-0"
0'-0" TO 14'-0"	600T150-33	600T150-33	600T150-33	600T150-33	600T150-43
14'-1" TO 16'-0"	600T150-33	600T150-33	600T150-33	600T150-33	600T150-43
16'-1" TO 18'-0"	600T150-33	600T150-33	600T150-33	600T150-43	600T150-43
18'-1" TO 20'-0"	600T150-33	600T150-33	600T150-33	600T150-43	600T150-43

AT 1 OR 2 HOUR WALL

**AT 8" WALLS, USE THE SAME SIZE SILL AS THE 6" WALL.

INTERIOR TYPICAL STUD SCHEDULE -L/240-

WALL HEIGHT	STUD DESCRIPTION (1) OR (2) LAYER(S) GYP.	STUD DESCRIPTION (1) OR (2) LAYER(S) GYP.
0'-0" TO 14'-0"	600S125-33 @ 16" O/C	600S125-33 @ 24" O/C
14'-1" TO 16'-0"	600S125-33 @ 16" O/C	600S125-33 @ 24" O/C
16'-1" TO 18'-0"	600S125-33 @ 16" O/C	600S125-33 @ 24" O/C
18'-1" TO 20'-0"	600S125-33 @ 16" O/C	600S125-33 @ 24" O/C

AT 1 OR 2 HOUR WALL

**AT 8" WALLS, ALL TYPICAL STUDS TO BE 800S125-43.

NOTES:

1. 1 HOUR WALL WEIGHT IS 6 PSF. 2 HOUR WALL WEIGHT IS 11 PSF.
2. WALLS ARE DESIGNED FOR 5 PSF LATERAL LOAD.
3. #10 SMS MAY BE SUBSTITUTED FOR # 8 SMS ON A 1:1 BASIS AT CONTRACTOR'S OPTION.
4. #10 SMS ARE TO BE USED AT ALL 14 GAUGE AND HEAVIER APPLICATIONS.
5. STUDS TO BE ROLLED BY A MANUFACTURER THAT IS A MEMBER OF SSMA AND STUDS MUST CONFORM TO SSMA ICC (ICBO) ER-4349P.
6. LISTED HEADERS, JAMBS, AND SILLS MAY BE UTILIZED FOR SPANS AND/OR HEIGHTS LESS THAN THE MAXIMUM [ALLOWABLE] SPANS & HEIGHTS SPECIFIED IN THE ABOVE SCHEDULES.
7. ALL WELDING TO BE PERFORMED BY CERTIFIED LIGHT-GAUGE WELDERS CERTIFIED FOR ALL APPROPRIATE DIRECTION COMPLYING WITH AWS D1.3. WELDING RODS TO CONFORM TO THE FOLLOWING:
   - A. 43 MIL — E60XX
   - B. 54 MIL AND HEAVIER — E70XX OR E6013

   WELDING WIRE FOR FCAW TO CONFROM TO THE FOLLOWING:
   - A. 18GA. — E6XT-X OR E7XT-X
   - B. 16GA. AND HEAVIER — E7XT-X

TOP CONNECTION

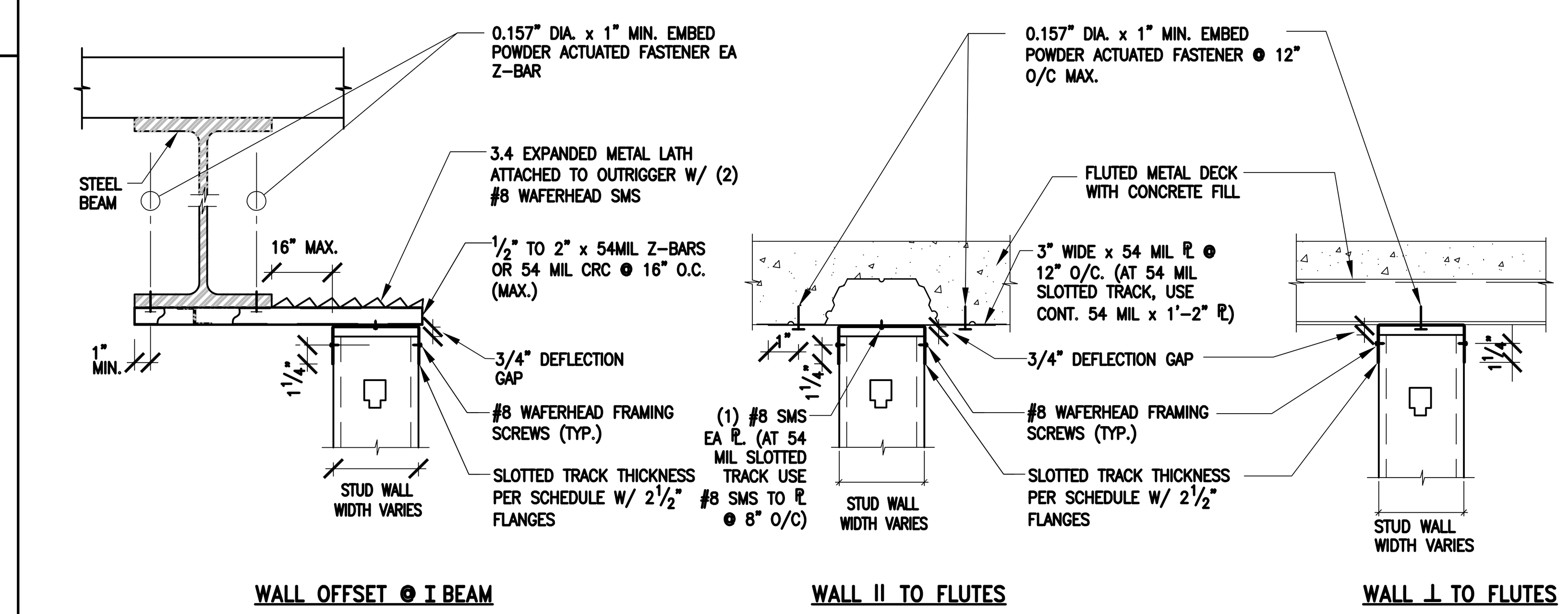

TYP. TOP CONNECTION DETAILS — 1 1/2"=1'-0" — 4

4-PIECE / 3-PIECE / 2-PIECE

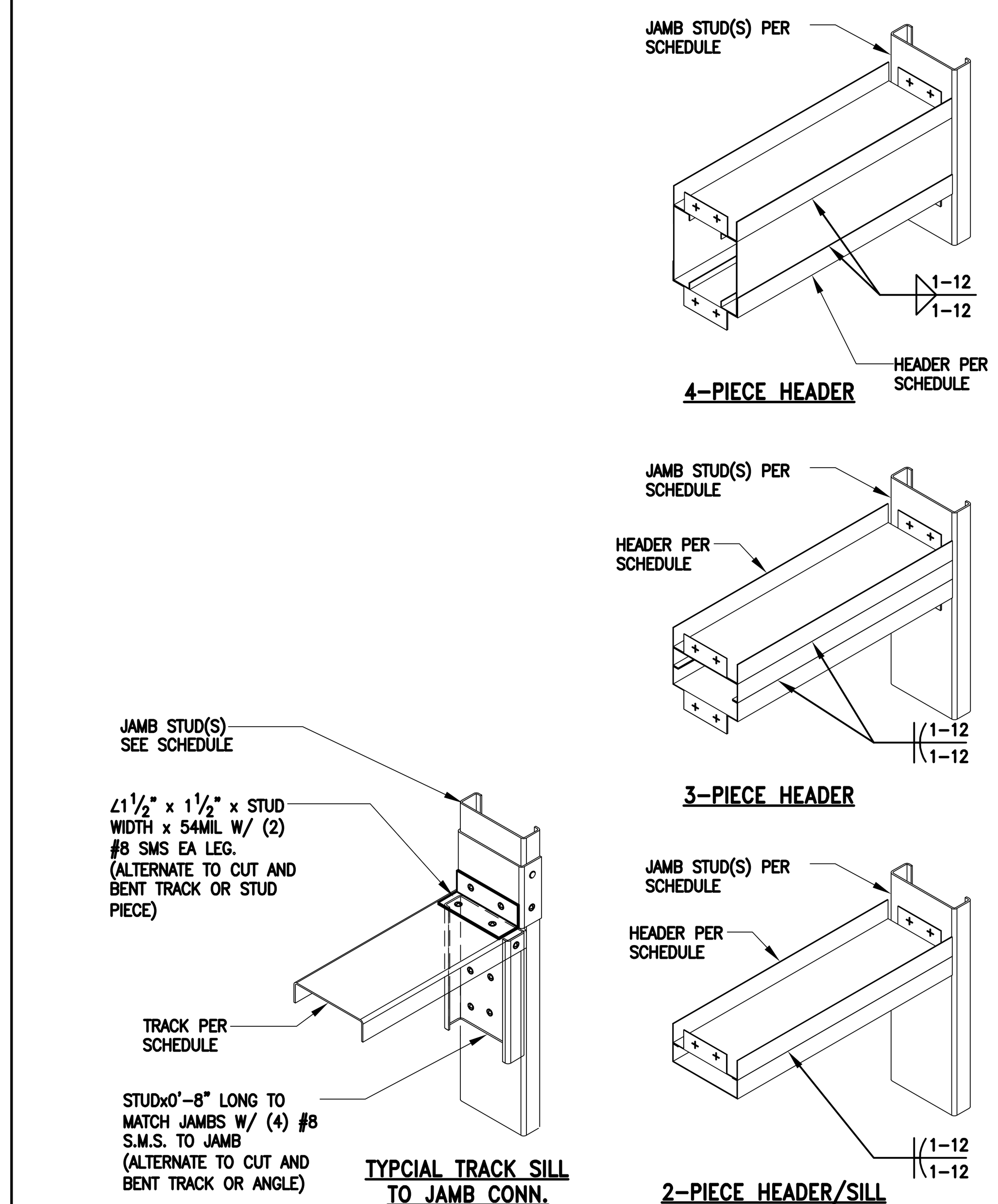

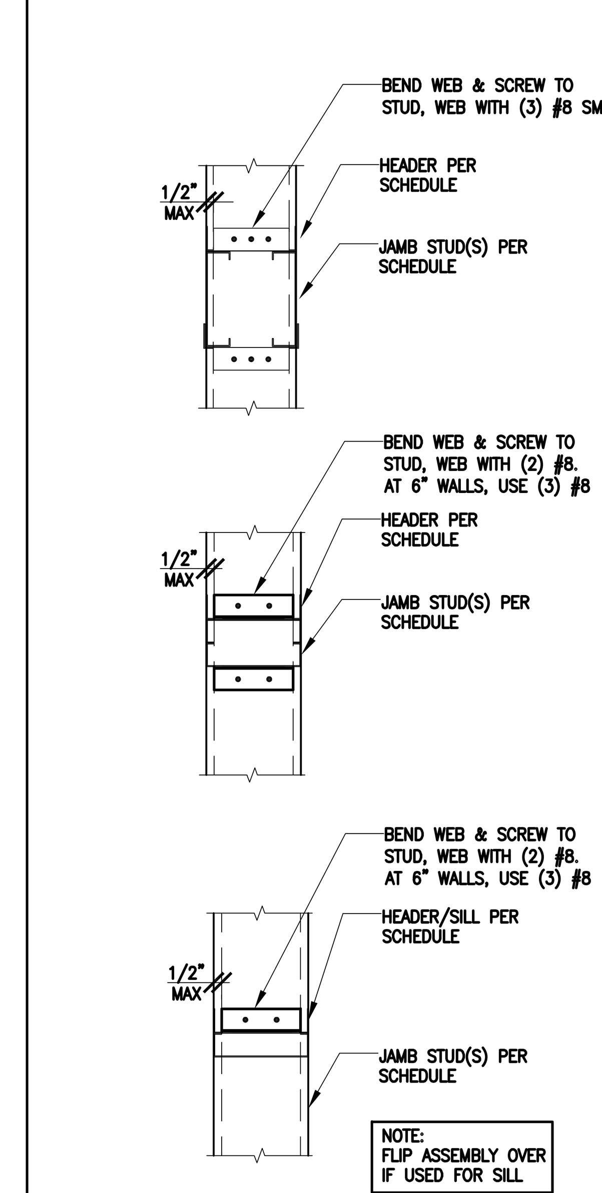

TYP. SILL AND HEADER CONNECTIONS — 1 1/2"=1'-0" — 3

STUD

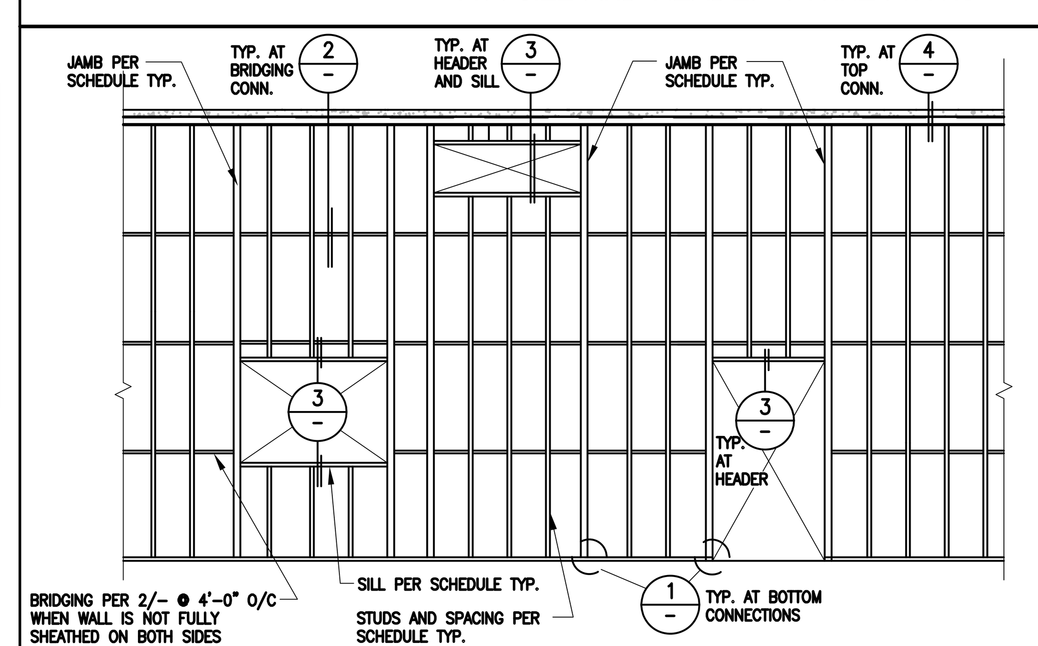

TYP. WALL ELEVATION — N.T.S. — 5

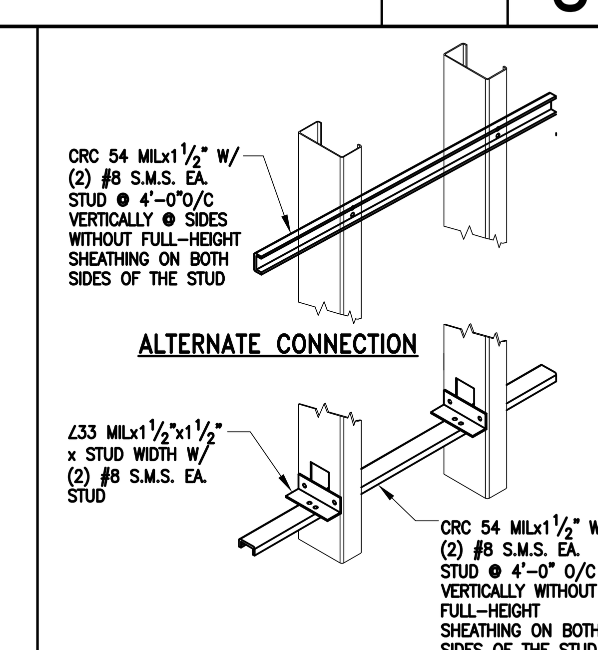

TYP. BRIDGING DETAIL — 1"=1'-0" — 2

BOTTOM CONNECTION

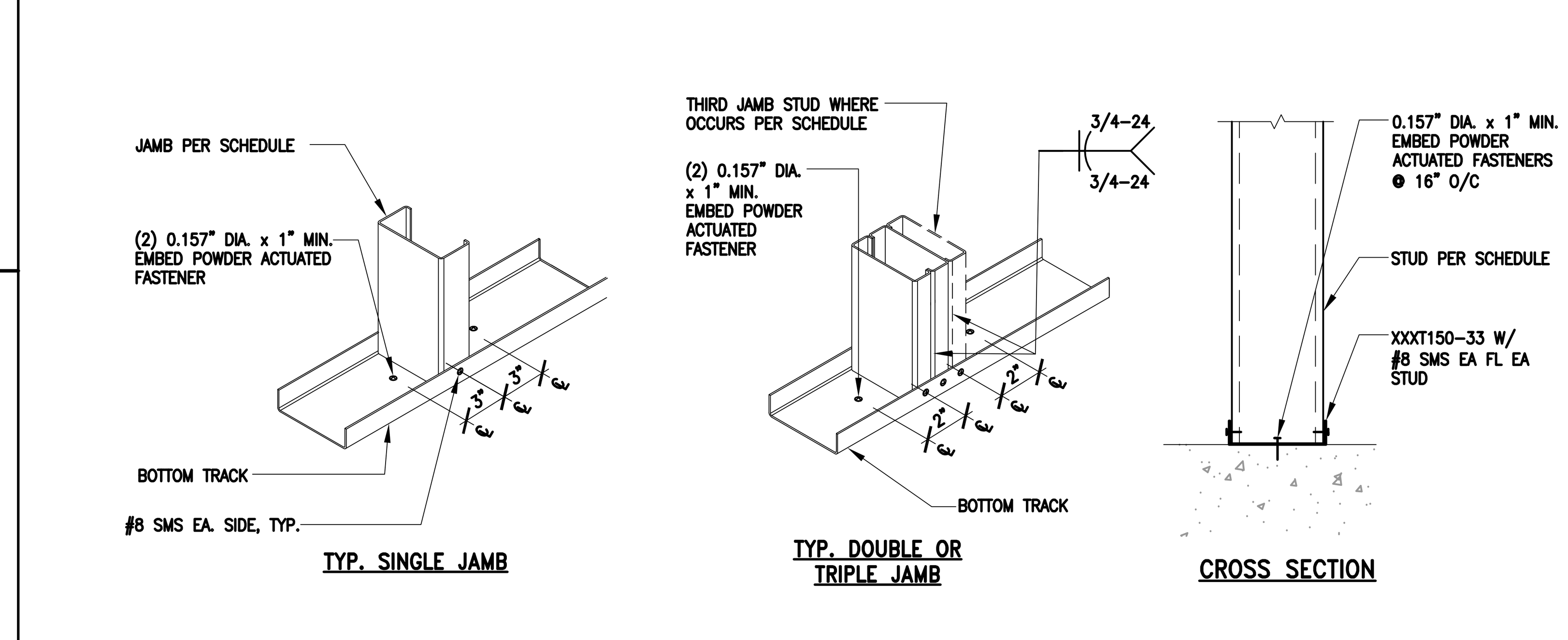

TYP. BOTTOM CONNECTION DETAILS — 1 1/2"=1'-0" — 1

FICCADENTI WAGGONER and CASTLE
Structural Engineers
3100 Oak Road, Suite 390
Walnut Creek, CA 94597
Telephone: (925) 280-0098
Facsimile: (925) 280-0096
www.fwcse.com

THIS DRAWING AND THE STRUCTURAL DESIGN CONCEPTS IT ILLUSTRATES ARE THE PROPERTY OF FICCADENTI, WAGGONER AND CASTLE STRUCTURAL ENGINEERS. THE DRAWING IS AN INSTRUMENT OF SERVICE PROVIDED FOR USE ON THE SPECIFIED PROJECT IDENTIFIED. USE OF THIS DRAWING WITHOUT WRITTEN CONSENT AND PARTICIPATION OF FICCADENTI, WAGGONER AND CASTLE STRUCTURAL ENGINEERS IS PROHIBITED.

OLMAR SUPPLY
Quality Products & Excellent Service for the Construction Industry
WWW.OLMARSUPPLY.COM
2140 RESEARCH DR
LIVERMORE, CA 94551
Tel: (925) 447-3500

INTERIOR METAL STUD
TYPICAL DETAILS

REV.	DATE	DESCRIPTION
△		
△		
△		
△		
△		
△		

DRAWN BY RLB
DATE 10-31-12
SHEET TITLE: TYPICAL DETAILS
PROJECT NO. B12-108
SHEET NO.